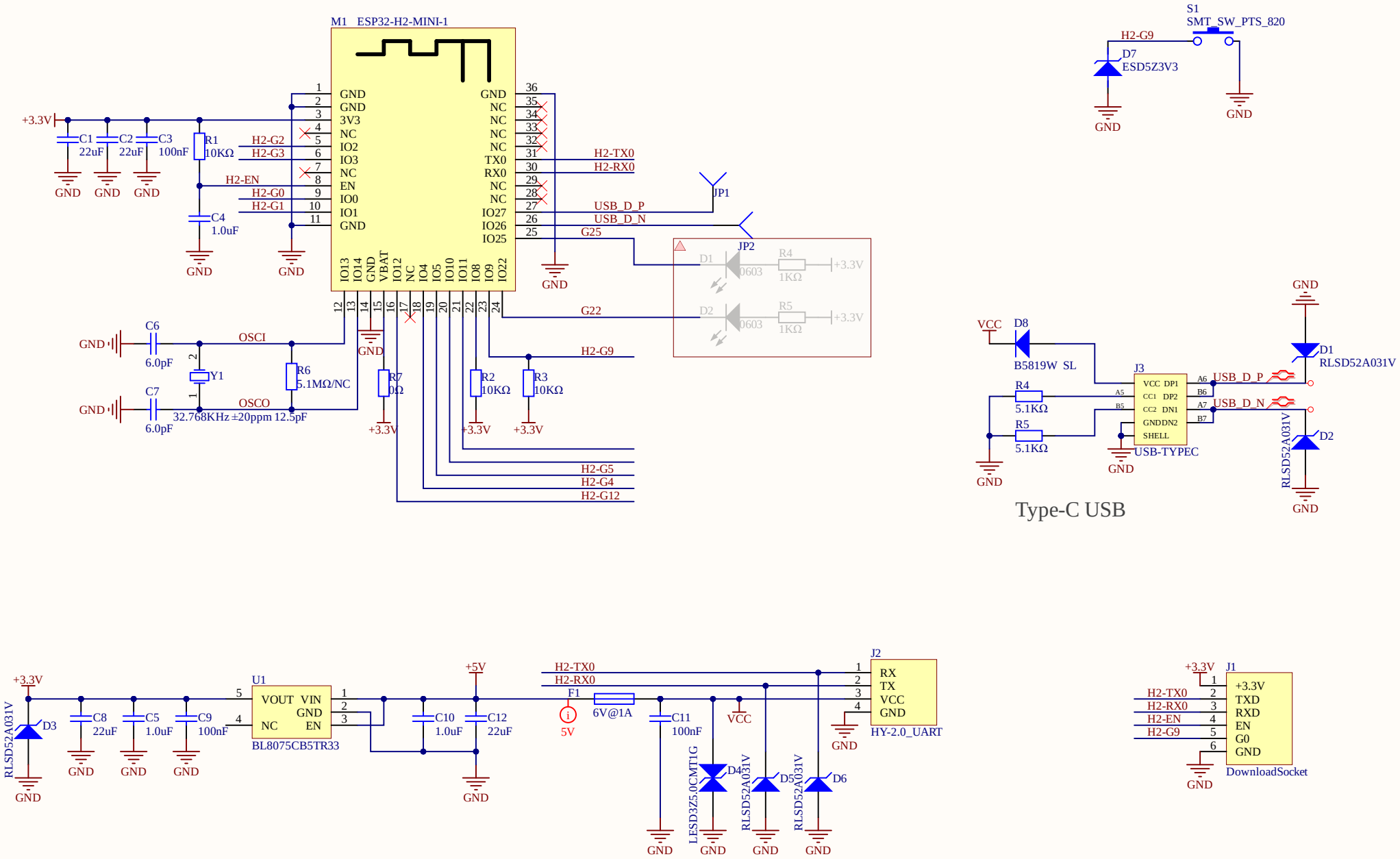
M1 ESP32-H2-MINI-1
GND
3V3
NC
IO2
IO3
EN
IO0
IO1
TX0
RX0
IO27
IO26
IO25
IO13
IO14
VBAT
IO12
IO4
IO5
IO10
IO11
IO8
IO9
IO22
+3.3V
C1 22uF
C2 22uF
C3 100nF
R1 10KΩ
C4 1.0uF
H2-G2
H2-G3
H2-EN
H2-G0
H2-G1
H2-TX0
H2-RX0
USB_D_P
USB_D_N
G25
G22
H2-G9
JP1
JP2
D1
D2
0603
R4 1KΩ
R5 1KΩ
C6 6.0pF
C7 6.0pF
OSCI
OSCO
Y1
32.768KHz ±20ppm 12.5pF
R6 5.1MΩ/NC
R7 0Ω
R2 10KΩ
R3 10KΩ
H2-G5
H2-G4
H2-G12
S1 SMT_SW_PTS_820
D7 ESD5Z3V3
VCC
D8 B5819W SL
R4 5.1KΩ
R5 5.1KΩ
J3
VCC DP1
CC1 DP2
CC2 DN1
GND DN2
SHELL
USB-TYPEC
A6 B6 A7 B7
A5 B5
D1 RLSD52A031V
D2 RLSD52A031V
Type-C USB
+5V
U1
VOUT VIN
GND
NC EN
BL8075CB5TR33
C8 22uF
C5 1.0uF
C9 100nF
C10 1.0uF
C12 22uF
D3 RLSD52A031V
F1 6V@1A
5V
C11 100nF
J2
RX
TX
VCC
GND
HY-2.0_UART
D4 LESD3Z5.0CMT1G
D5 RLSD52A031V
D6 RLSD52A031V
J1
+3.3V
TXD
RXD
EN
G0
GND
DownloadSocket
H2-EN
H2-G9