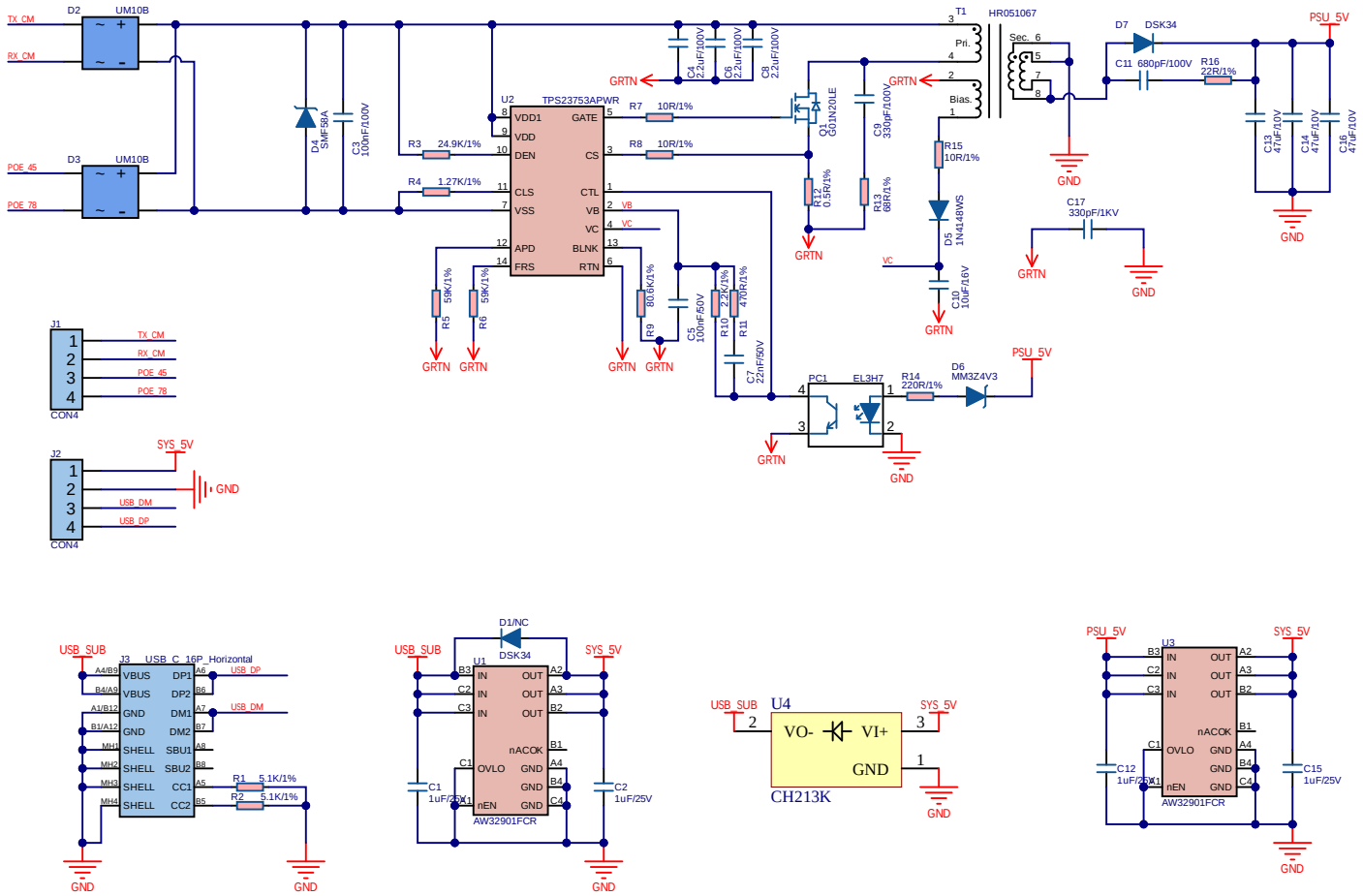
TX_CM
RX_CM
POE_45
POE_78
D2
UM10B
D3
UM10B
D4
SMF58A
C3
100nF/100V
R3
24.9K/1%
R4
1.27K/1%
U2
TPS23753APWR
VDD1
VDD
DEN
CLS
VSS
APD
FRS
GATE
CS
CTL
VB
VC
BLNK
RTN
R7
10R/1%
R8
10R/1%
C4
22uF/100V
C6
22uF/100V
C8
22uF/100V
GRTN
Q1
G01N20LE
C9
330pF/100V
R12
0.5R/1%
R13
68R/1%
T1
HR051067
Pri.
Sec.
Bias
R15
10R/1%
D5
1N4148WS
C10
10uF/16V
C17
330pF/1KV
D7
DSK34
C11
680pF/100V
R16
22R/1%
PSU_5V
C13
47uF/10V
C14
47uF/10V
C16
47uF/10V
GND
R5
59K/1%
R6
59K/1%
R9
80.6K/1%
C5
100nF/50V
R10
2.2K/1%
R11
470R/1%
C7
22nF/50V
PC1
EL3H7
R14
220R/1%
D6
MM3Z4V3
J1
CON4
J2
CON4
SYS_5V
USB_DM
USB_DP
USB_SUB
J3
USB_C_16P_Horizontal
VBUS
GND
SHELL
DP1
DP2
DM1
DM2
SBU1
SBU2
CC1
CC2
R1
5.1K/1%
R2
5.1K/1%
D1/NC
DSK34
U1
AW32901FCR
IN
OUT
nACOK
OVLO
nEN
C1
1uF/25V
C2
1uF/25V
U4
VO-
VI+
CH213K
U3
AW32901FCR
C12
1uF/25V
C15
1uF/25V