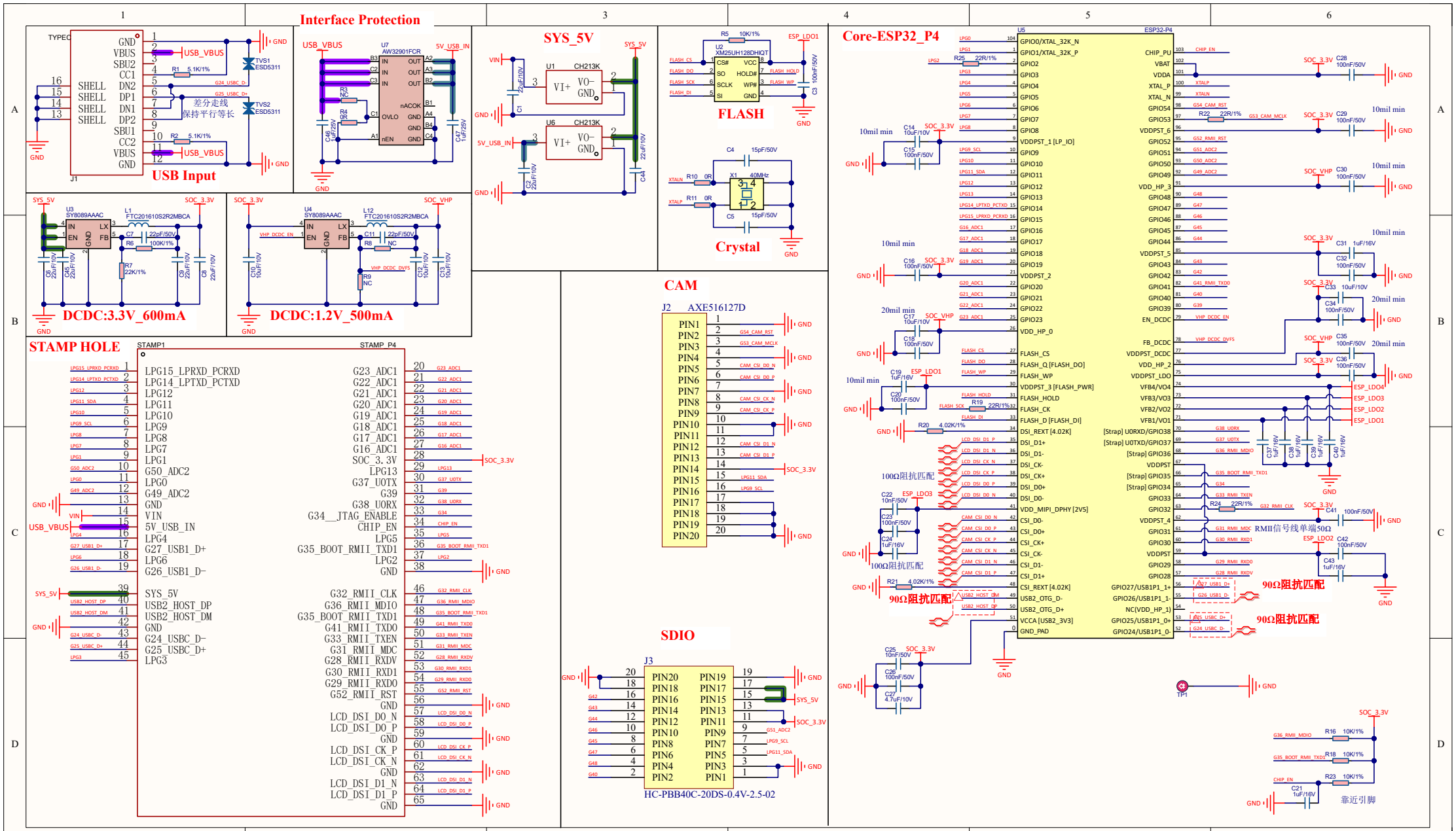
Interface Protection
USB Input
TYPEC
J1
USB_VBUS
TVS1 ESD5311
TVS2 ESD5311
差分走线
保持平行等长
U7 AW32901FCR
5V_USB_IN
SYS_5V
U1 CH213K
U6 CH213K
FLASH
U2 XM25UH128DHIQT
Crystal
X1 40MHz
DCDC:3.3V_600mA
U3 SY8089AAAC
L1 FTC201610S2R2MBCA
DCDC:1.2V_500mA
U4 SY8089AAAC
L12 FTC201610S2R2MBCA
STAMP HOLE
STAMP1
STAMP_P4
CAM
J2 AXE516127D
SDIO
J3
HC-PBB40C-20DS-0.4V-2.5-02
Core-ESP32_P4
U5 ESP32-P4
90Ω阻抗匹配
100Ω阻抗匹配
RMII信号线单端50Ω
靠近引脚
TP1