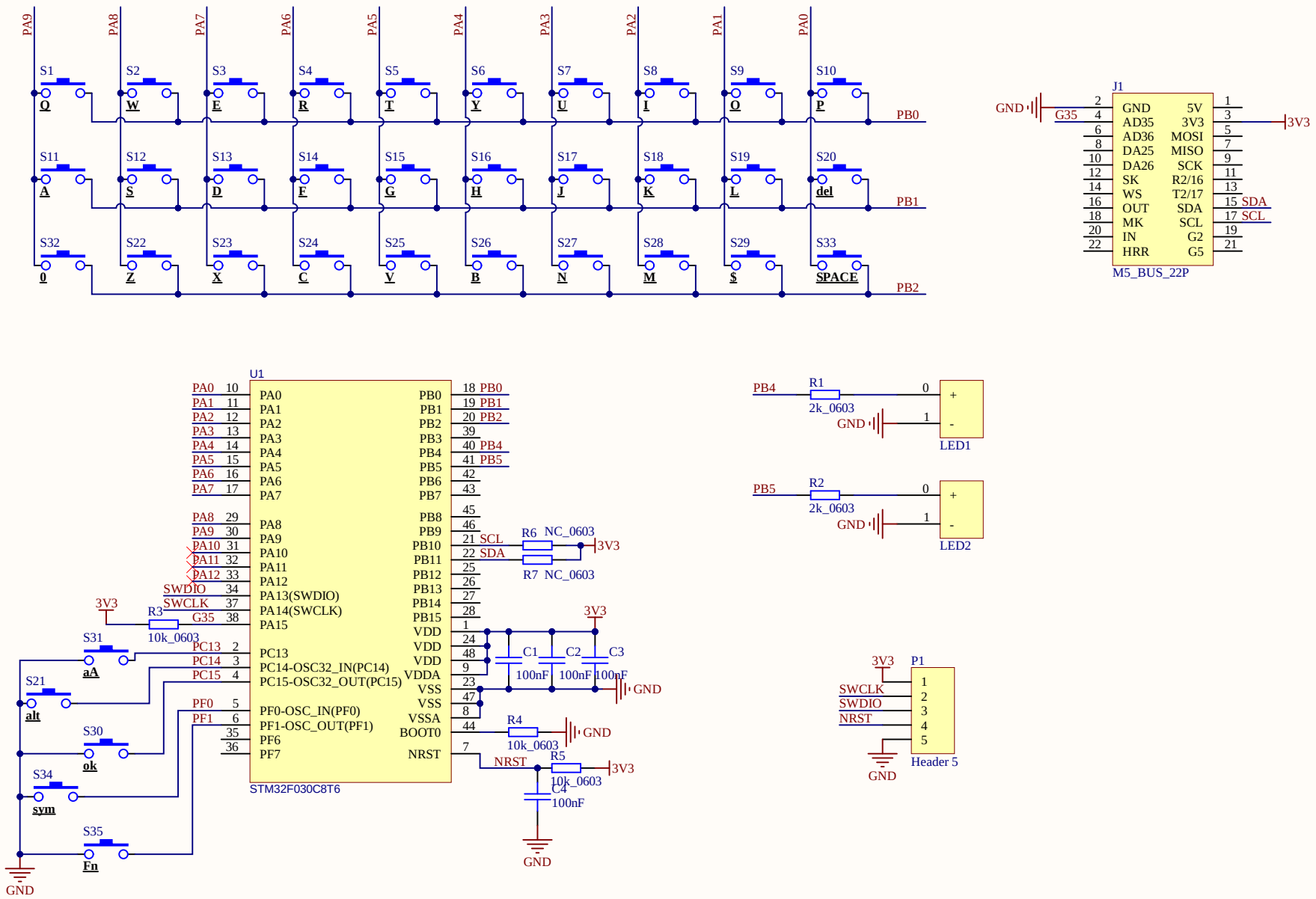
PA9
PA8
PA7
PA6
PA5
PA4
PA3
PA2
PA1
PA0
S1 Q
S2 W
S3 E
S4 R
S5 T
S6 Y
S7 U
S8 I
S9 O
S10 P
PB0
S11 A
S12 S
S13 D
S14 F
S15 G
S16 H
S17 J
S18 K
S19 L
S20 del
PB1
S32 0
S22 Z
S23 X
S24 C
S25 V
S26 B
S27 N
S28 M
S29 $
S33 SPACE
PB2
J1
GND
G35
3V3
SDA
SCL
M5_BUS_22P
U1
STM32F030C8T6
PA0 10
PA1 11
PA2 12
PA3 13
PA4 14
PA5 15
PA6 16
PA7 17
PA8 29
PA9 30
PA10 31
PA11 32
PA12 33
SWDIO 34
SWCLK 37
G35 38
PC13 2
PC14 3
PC15 4
PF0 5
PF1 6
35
36
18 PB0
19 PB1
20 PB2
39
40 PB4
41 PB5
42
43
45
46
21 SCL
22 SDA
25
26
27
28
1
24
48
9
23
47
8
44
7
R6 NC_0603
R7 NC_0603
C1 100nF
C2 100nF
C3 100nF
R4 10k_0603
R5 10k_0603
C4 100nF
NRST
S31 aA
S21 alt
S30 ok
S34 sym
S35 Fn
R3 10k_0603
PB4
PB5
R1 2k_0603
R2 2k_0603
LED1
LED2
P1
Header 5
SWCLK
SWDIO
NRST