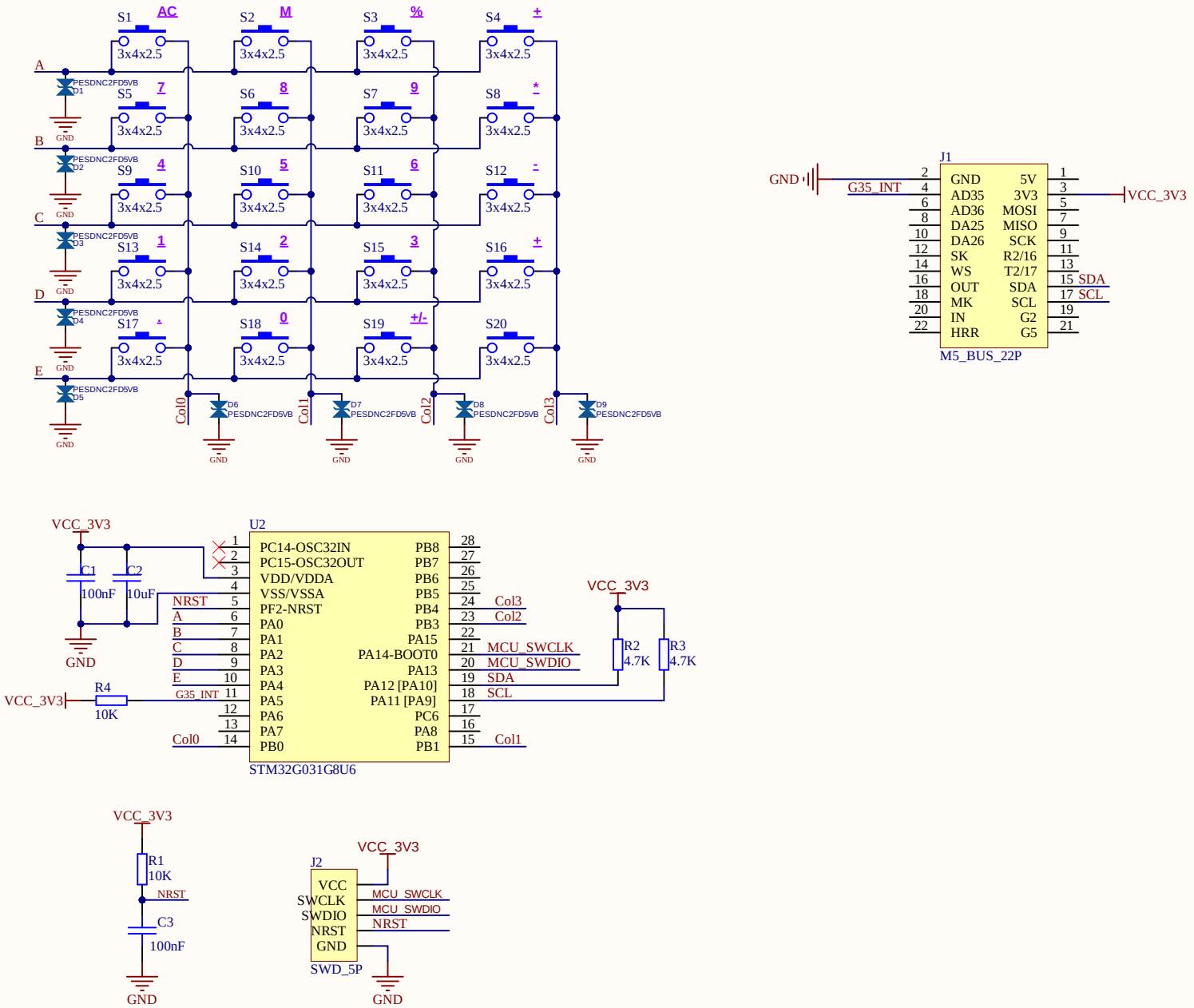
S1 AC
S2 M
S3 %
S4 +
S5 7
S6 8
S7 9
S8 *
S9 4
S10 5
S11 6
S12 -
S13 1
S14 2
S15 3
S16 +
S17 .
S18 0
S19 +/-
S20
3x4x2.5
A
B
C
D
E
PESDNC2FD5VB
D1
D2
D3
D4
D5
D6
D7
D8
D9
GND
Col0
Col1
Col2
Col3
J1
M5_BUS_22P
GND
G35_INT
VCC_3V3
GND AD35 AD36 DA25 DA26 SK WS OUT MK IN HRR
5V 3V3 MOSI MISO SCK R2/16 T2/17 SDA SCL G2 G5
SDA
SCL
U2
STM32G031G8U6
PC14-OSC32IN
PC15-OSC32OUT
VDD/VDDA
VSS/VSSA
PF2-NRST
PA0
PA1
PA2
PA3
PA4
PA5
PA6
PA7
PB0
PB8
PB7
PB6
PB5
PB4
PB3
PA15
PA14-BOOT0
PA13
PA12 [PA10]
PA11 [PA9]
PC6
PA8
PB1
C1 100nF
C2 10uF
R4 10K
R2 4.7K
R3 4.7K
MCU_SWCLK
MCU_SWDIO
R1 10K
C3 100nF
J2
SWD_5P
VCC
SWCLK
SWDIO
NRST
GND