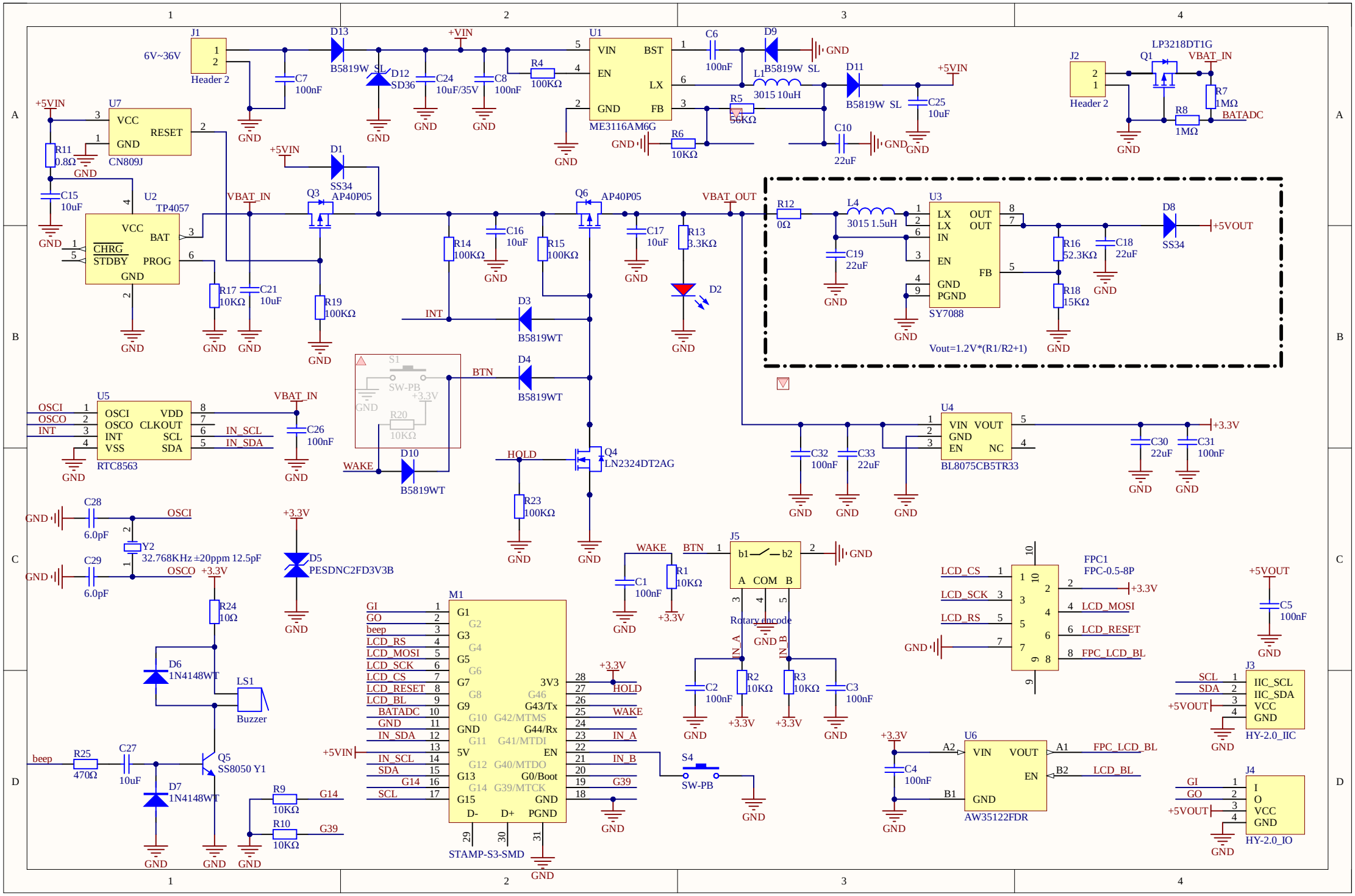
6V~36V
J1
Header 2
D13
B5819W SL
D12
SD36
+VIN
C7
100nF
C24
10uF/35V
C8
100nF
R4
100KΩ
U1
VIN
BST
EN
LX
GND
FB
ME3116AM6G
C6
100nF
D9
B5819W SL
L1
3015 10uH
R5
56KΩ
R6
10KΩ
D11
B5819W SL
C25
10uF
C10
22uF
+5VIN
J2
Header 2
Q1
LP3218DT1G
VBAT_IN
R7
1MΩ
R8
1MΩ
BATADC
U7
VCC
RESET
GND
CN809J
R11
0.8Ω
C15
10uF
D1
SS34
U2
TP4057
VCC
BAT
CHRG
STDBY
PROG
GND
VBAT_IN
Q3
AP40P05
Q6
AP40P05
VBAT_OUT
R14
100KΩ
C16
10uF
R15
100KΩ
C17
10uF
R13
3.3KΩ
D2
R17
10KΩ
C21
10uF
R19
100KΩ
INT
D3
B5819WT
S1
SW-PB
BTN
D4
B5819WT
R20
10KΩ
WAKE
D10
B5819WT
HOLD
Q4
LN2324DT2AG
R23
100KΩ
R12
0Ω
L4
3015 1.5uH
U3
LX
OUT
IN
EN
FB
GND
PGND
SY7088
C19
22uF
R16
52.3KΩ
C18
22uF
R18
15KΩ
D8
SS34
+5VOUT
Vout=1.2V*(R1/R2+1)
U5
OSCI
OSCO
INT
VSS
VDD
CLKOUT
SCL
SDA
RTC8563
IN_SCL
IN_SDA
C26
100nF
U4
VIN
VOUT
GND
EN
NC
BL8075CB5TR33
C32
100nF
C33
22uF
C30
22uF
C31
100nF
+3.3V
C28
6.0pF
C29
6.0pF
Y2
32.768KHz ±20ppm 12.5pF
D5
PESDNC2FD3V3B
R24
10Ω
D6
1N4148WT
LS1
Buzzer
beep
R25
470Ω
C27
10uF
Q5
SS8050 Y1
D7
1N4148WT
R9
10KΩ
R10
10KΩ
G14
G39
M1
STAMP-S3-SMD
GI
GO
beep
LCD_RS
LCD_MOSI
LCD_SCK
LCD_CS
LCD_RESET
LCD_BL
BATADC
IN_SDA
IN_SCL
SDA
SCL
3V3
HOLD
WAKE
IN_A
IN_B
EN
PGND
D-
D+
C1
100nF
R1
10KΩ
J5
b1
b2
A
COM
B
Rotary encode
C2
100nF
R2
10KΩ
R3
10KΩ
C3
100nF
S4
SW-PB
FPC1
FPC-0.5-8P
LCD_CS
LCD_SCK
LCD_RS
LCD_MOSI
LCD_RESET
FPC_LCD_BL
C5
100nF
J3
IIC_SCL
IIC_SDA
VCC
GND
HY-2.0_IIC
U6
VIN
VOUT
EN
GND
AW35122FDR
A2
A1
B2
B1
C4
100nF
J4
I
O
VCC
GND
HY-2.0_IO