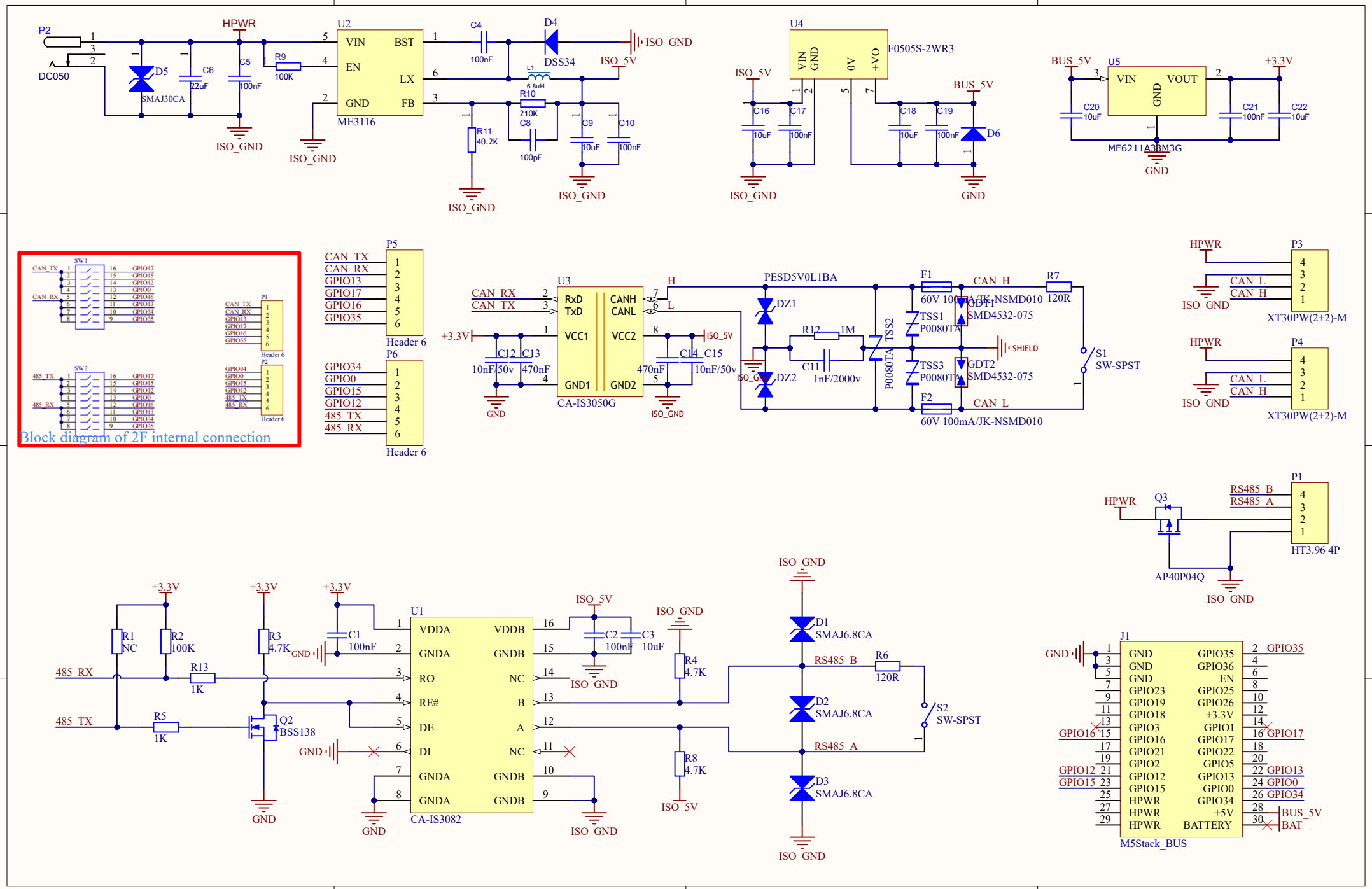
P2
DC050
D5
SMAJ30CA
C6
22uF
C5
100nF
HPWR
R9
100K
U2
VIN
EN
GND
BST
LX
FB
ME3116
C4
100nF
D4
DSS34
L1
6.8uH
R10
210K
C8
100pF
R11
40.2K
C9
10uF
C10
100nF
ISO_GND
ISO_5V
U4
F0505S-2WR3
VIN
GND
0V
+VO
C16
10uF
C17
100nF
C18
10uF
C19
100nF
D6
BUS_5V
U5
VIN
VOUT
GND
ME6211A33M3G
C20
10uF
C21
100nF
C22
10uF
+3.3V
Block diagram of 2F internal connection
SW1
SW2
P1
P2
Header 6
P5
P6
CAN_TX
CAN_RX
GPIO13
GPIO17
GPIO16
GPIO35
GPIO34
GPIO0
GPIO15
GPIO12
485_TX
485_RX
U3
RxD
TxD
VCC1
GND1
CANH
CANL
VCC2
GND2
CA-IS3050G
C12
10nF/50v
C13
470nF
C14
470nF
C15
10nF/50v
PESD5V0L1BA
DZ1
DZ2
R12
1M
C11
1nF/2000v
TSS2
P0080TA
F1
F2
60V 100mA/JK-NSMD010
GDT1
GDT2
SMD4532-075
TSS1
TSS3
R7
120R
SHIELD
S1
SW-SPST
P3
P4
XT30PW(2+2)-M
Q3
AP40P04Q
HT3.96 4P
U1
VDDA
GNDA
RO
RE#
DE
DI
VDDB
GNDB
NC
B
A
CA-IS3082
R1
NC
R2
100K
R3
4.7K
R13
1K
R5
1K
Q2
BSS138
C1
100nF
C2
100nF
C3
10uF
R4
4.7K
R8
4.7K
D1
SMAJ6.8CA
D2
SMAJ6.8CA
D3
SMAJ6.8CA
R6
120R
S2
SW-SPST
J1
M5Stack_BUS
GND
GPIO35
GPIO36
EN
GPIO25
GPIO19
GPIO26
GPIO23
GPIO18
+3.3V
GPIO3
GPIO1
GPIO16
GPIO17
GPIO21
GPIO22
GPIO2
GPIO5
GPIO12
GPIO13
GPIO15
GPIO0
GPIO34
HPWR
+5V
BATTERY
BUS_5V
BAT