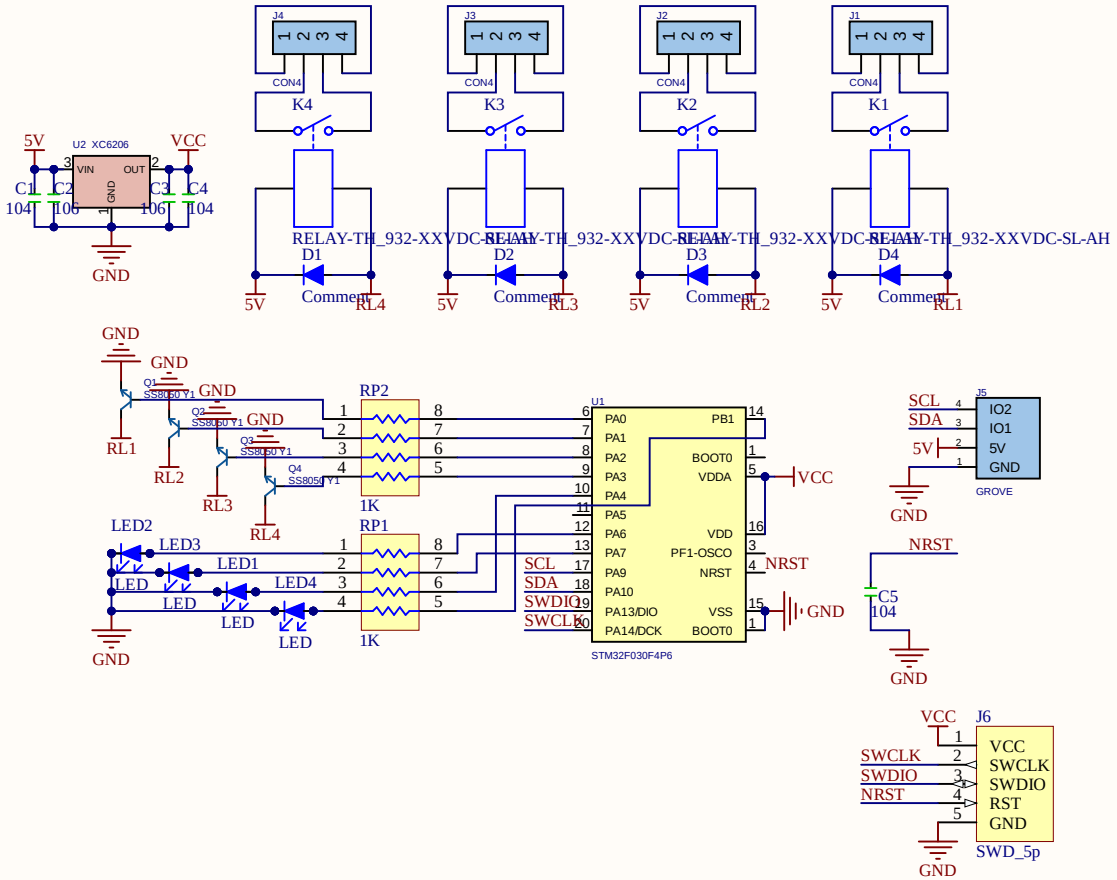
J4
J3
J2
J1
CON4
K4
K3
K2
K1
RELAY-TH_932-XXVDC-SL-AH
D1
D2
D3
D4
Comment
RL4
RL3
RL2
RL1
5V
VCC
U2 XC6206
VIN
OUT
GND
C1
C2
C3
C4
104
106
Q1
Q2
Q3
Q4
SS8050Y1
RP2
RP1
1K
LED2
LED3
LED1
LED4
LED
U1
PA0
PA1
PA2
PA3
PA4
PA5
PA6
PA7
PA9
PA10
PA13/DIO
PA14/DCK
PB1
BOOT0
VDDA
VDD
PF1-OSCO
NRST
VSS
SCL
SDA
SWDIO
SWCLK
STM32F030F4P6
J5
IO2
IO1
GROVE
C5
J6
SWD_5p