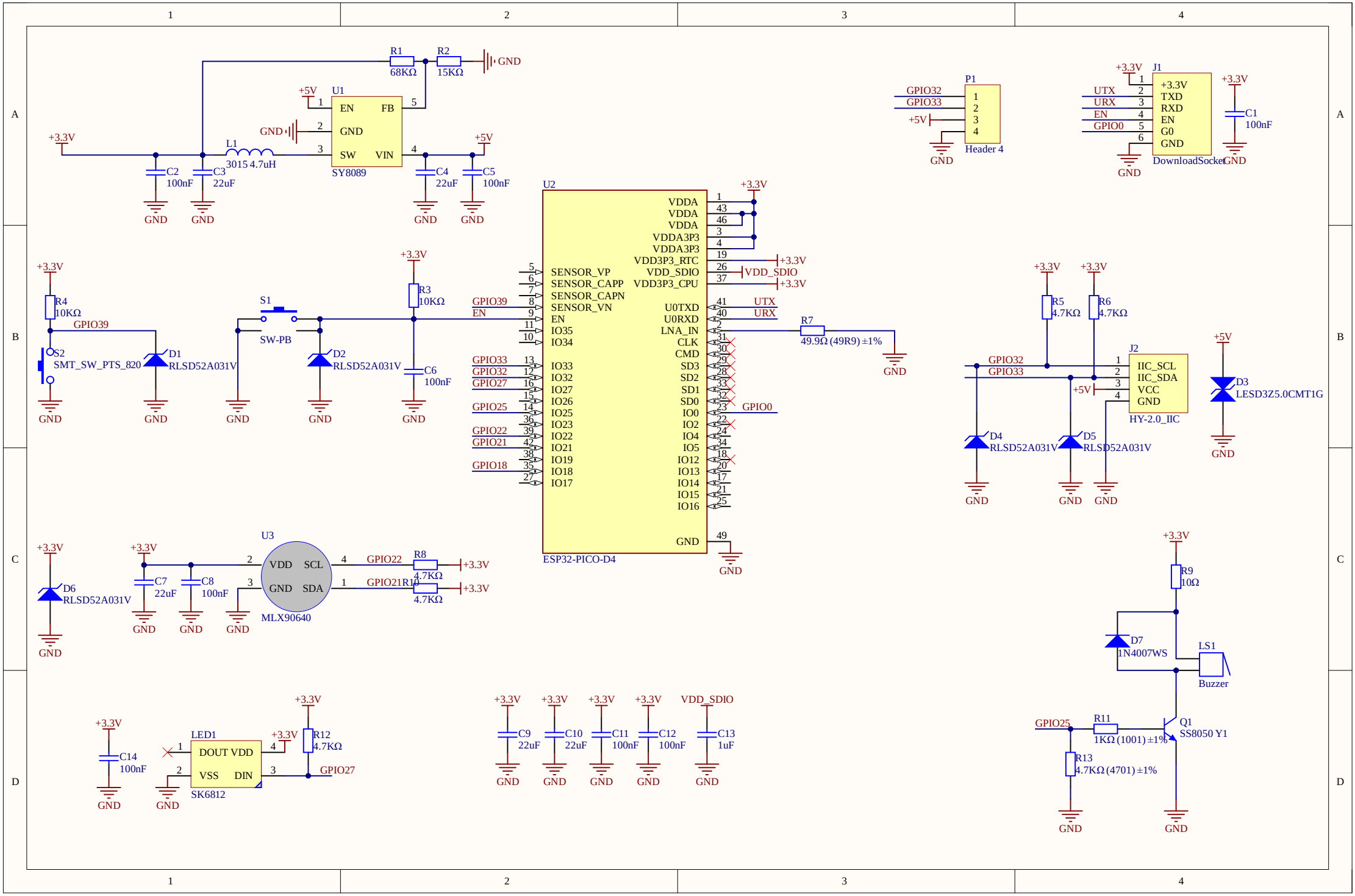
R1
68KΩ
R2
15KΩ
GND
U1
EN
FB
GND
SW
VIN
SY8089
+5V
+3.3V
L1
3015 4.7uH
C2
100nF
C3
22uF
C4
22uF
C5
100nF
P1
GPIO32
GPIO33
Header 4
J1
UTX
URX
EN
GPIO0
+3.3V
TXD
RXD
EN
G0
GND
DownloadSocket
C1
100nF
U2
VDDA
VDDA3P3
VDD3P3_RTC
VDD3P3_CPU
VDD_SDIO
SENSOR_VP
SENSOR_CAPP
SENSOR_CAPN
SENSOR_VN
IO35
IO34
IO33
IO32
IO27
IO26
IO25
IO23
IO22
IO21
IO19
IO18
IO17
U0TXD
U0RXD
LNA_IN
CLK
CMD
SD3
SD2
SD1
SD0
IO0
IO2
IO4
IO5
IO12
IO13
IO14
IO15
IO16
ESP32-PICO-D4
R4
10KΩ
S2
SMT_SW_PTS_820
D1
RLSD52A031V
S1
SW-PB
D2
RLSD52A031V
R3
10KΩ
C6
100nF
GPIO39
EN
GPIO25
GPIO22
GPIO21
GPIO18
R7
49.9Ω (49R9) ±1%
R5
4.7KΩ
R6
4.7KΩ
J2
IIC_SCL
IIC_SDA
VCC
GND
HY-2.0_IIC
D3
LESD3Z5.0CMT1G
D4
RLSD52A031V
D5
RLSD52A031V
D6
RLSD52A031V
U3
VDD
SCL
GND
SDA
MLX90640
C7
22uF
C8
100nF
R8
4.7KΩ
R10
4.7KΩ
R9
10Ω
D7
1N4007WS
LS1
Buzzer
Q1
SS8050 Y1
R11
1KΩ (1001) ±1%
R13
4.7KΩ (4701) ±1%
C14
100nF
LED1
DOUT
VDD
VSS
DIN
SK6812
R12
4.7KΩ
C9
22uF
C10
22uF
C11
100nF
C12
100nF
C13
1uF