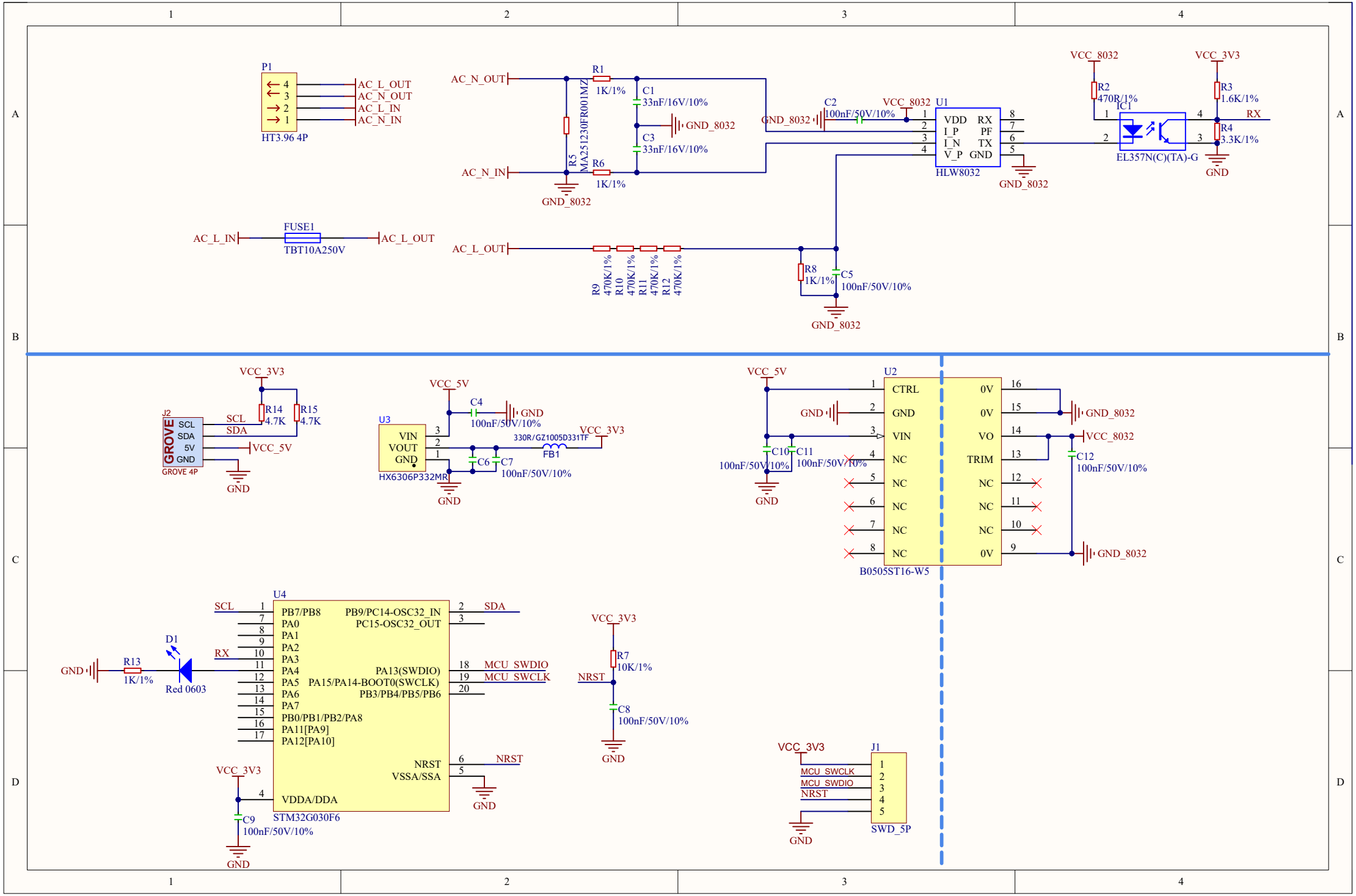
P1
HT3.96 4P
AC_L_OUT
AC_N_OUT
AC_L_IN
AC_N_IN
AC_N_OUT
AC_N_IN
R1
1K/1%
R6
1K/1%
R5
MA251230FR001MZ
C1
33nF/16V/10%
C3
33nF/16V/10%
GND_8032
C2
100nF/50V/10%
VCC_8032
U1
VDD
I_P
I_N
V_P
RX
PF
TX
GND
HLW8032
VCC_8032
VCC_3V3
R2
470R/1%
R3
1.6K/1%
R4
3.3K/1%
IC1
EL357N(C)(TA)-G
RX
GND
AC_L_IN
FUSE1
TBT10A250V
AC_L_OUT
AC_L_OUT
R9
470K/1%
R10
470K/1%
R11
470K/1%
R12
470K/1%
R8
1K/1%
C5
100nF/50V/10%
J2
GROVE
SCL
SDA
5V
GND
GROVE 4P
VCC_3V3
R14
4.7K
R15
4.7K
VCC_5V
U3
VIN
VOUT
GND
HX6306P332MR
VCC_5V
C4
100nF/50V/10%
330R/GZ1005D331TF
FB1
VCC_3V3
C6
C7
100nF/50V/10%
U2
CTRL
GND
VIN
NC
0V
VO
TRIM
B0505ST16-W5
C10
100nF/50V/10%
C11
100nF/50V/10%
C12
100nF/50V/10%
U4
PB7/PB8
PA0
PA1
PA2
PA3
PA4
PA5
PA6
PA7
PB0/PB1/PB2/PA8
PA11[PA9]
PA12[PA10]
PB9/PC14-OSC32_IN
PC15-OSC32_OUT
PA13(SWDIO)
PA15/PA14-BOOT0(SWCLK)
PB3/PB4/PB5/PB6
NRST
VSSA/SSA
VDDA/DDA
STM32G030F6
SCL
RX
SDA
MCU_SWDIO
MCU_SWCLK
NRST
D1
Red 0603
R13
1K/1%
VCC_3V3
R7
10K/1%
C8
100nF/50V/10%
C9
100nF/50V/10%
J1
MCU_SWCLK
MCU_SWDIO
NRST
SWD_5P