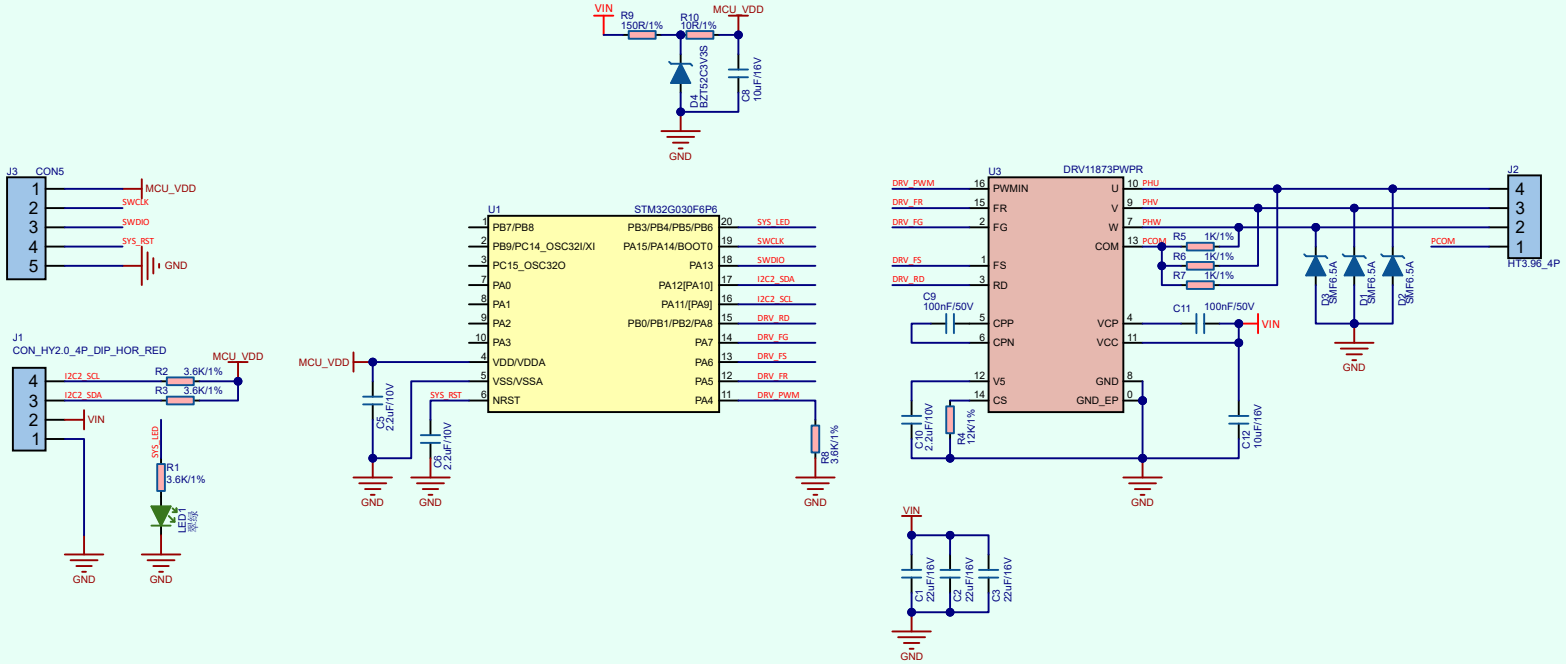
J3 CON5
MCU_VDD
SWCLK
SWDIO
SYS_RST
GND
J1
CON_HY2.0_4P_DIP_HOR_RED
I2C2_SCL
I2C2_SDA
VIN
R2 3.6K/1%
R3 3.6K/1%
R1 3.6K/1%
LED1
U1
STM32G030F6P6
PB7/PB8
PB9/PC14_OSC32I/XI
PC15_OSC32O
PA0
PA1
PA2
PA3
VDD/VDDA
VSS/VSSA
NRST
PB3/PB4/PB5/PB6
PA15/PA14/BOOT0
PA13
PA12[PA10]
PA11/[PA9]
PB0/PB1/PB2/PA8
PA7
PA6
PA5
PA4
SYS_LED
SWCLK
SWDIO
I2C2_SDA
I2C2_SCL
DRV_RD
DRV_FG
DRV_FS
DRV_FR
DRV_PWM
C5 2.2uF/10V
C6 2.2uF/10V
R8 3.6K/1%
R9 150R/1%
R10 10R/1%
D4 BZT52C3V3S
C8 10uF/16V
U3
DRV11873PWPR
PWMIN
FR
FG
FS
RD
CPP
CPN
V5
CS
U
V
W
COM
VCP
VCC
GND
GND_EP
PHU
PHV
PHW
PCOM
R5 1K/1%
R6 1K/1%
R7 1K/1%
C9 100nF/50V
C11 100nF/50V
C10 2.2uF/10V
R4 12K/1%
C12 10uF/16V
D3 SMF6.5A
D1 SMF6.5A
D2 SMF6.5A
J2
HT3.96_4P
C1 22uF/16V
C2 22uF/16V
C3 22uF/16V