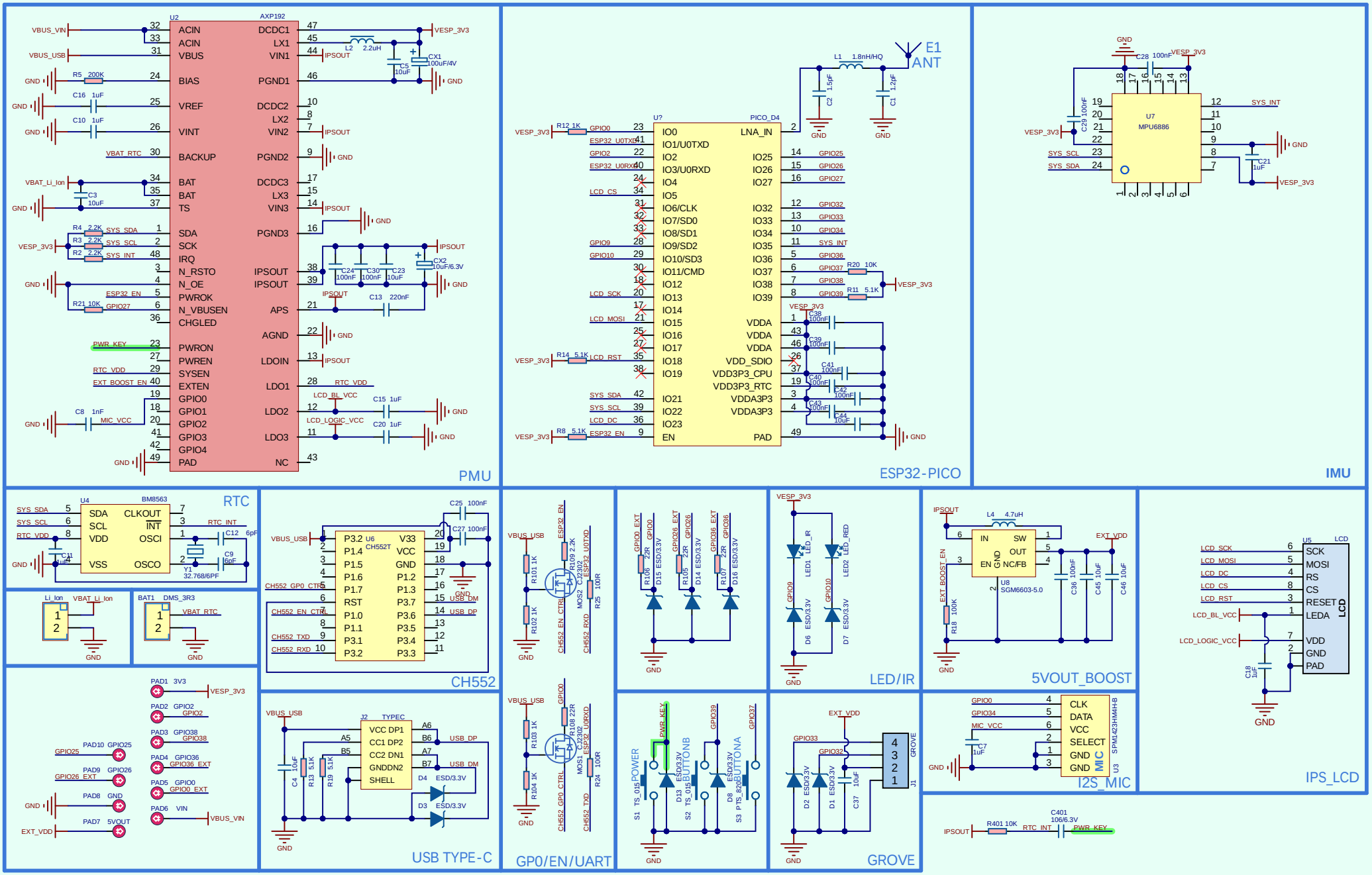
PMU
U2
AXP192
ACIN
VBUS
BIAS
VREF
VINT
BACKUP
BAT
TS
SDA
SCK
IRQ
N_RSTO
N_OE
PWROK
N_VBUSEN
CHGLED
PWRON
PWREN
SYSEN
EXTEN
GPIO0
GPIO1
GPIO2
GPIO3
GPIO4
PAD
DCDC1
LX1
VIN1
PGND1
DCDC2
LX2
VIN2
PGND2
DCDC3
LX3
VIN3
PGND3
IPSOUT
APS
AGND
LDOIN
LDO1
LDO2
LDO3
NC
VESP_3V3
VBUS_VIN
VBUS_USB
VBAT_RTC
VBAT_Li_Ion
SYS_SDA
SYS_SCL
SYS_INT
ESP32_EN
GPIO27
PWR_KEY
RTC_VDD
EXT_BOOST_EN
MIC_VCC
LCD_BL_VCC
LCD_LOGIC_VCC
ESP32-PICO
U?
PICO_D4
E1
ANT
LNA_IN
IO0
IO1/U0TXD
IO2
IO3/U0RXD
IO4
IO5
IO6/CLK
IO7/SD0
IO8/SD1
IO9/SD2
IO10/SD3
IO11/CMD
IO12
IO13
IO14
IO15
IO16
IO17
IO18
IO19
IO21
IO22
IO23
EN
IO25
IO26
IO27
IO32
IO33
IO34
IO35
IO36
IO37
IO38
IO39
VDDA
VDD_SDIO
VDD3P3_CPU
VDD3P3_RTC
VDDA3P3
PAD
LCD_CS
LCD_SCK
LCD_MOSI
LCD_RST
LCD_DC
IMU
U7
MPU6886
RTC
U4
BM8563
SDA
SCL
VDD
VSS
CLKOUT
INT
OSCI
OSCO
Y1
32.768/6PF
Li_Ion
BAT1
DMS_3R3
CH552
U6
CH552T
P3.2
P1.4
P1.5
P1.6
P1.7
RST
P1.0
P1.1
P3.1
P3.2
V33
VCC
GND
P1.2
P1.3
P3.7
P3.6
P3.5
P3.4
P3.3
CH552_GP0_CTRL
CH552_EN_CTRL
CH552_TXD
CH552_RXD
USB_DM
USB_DP
USB TYPE-C
J2
TYPEC
VCC DP1
CC1 DP2
CC2 DN1
GNDDN2
SHELL
ESD/3.3V
GP0/EN/UART
LED/IR
5VOUT_BOOST
U8
SGM6603-5.0
I2S_MIC
U3
SPM1423HM4H-B
MIC
IPS_LCD
U5
LCD
SCK
MOSI
RS
CS
RESET
LEDA
VDD
GND
PAD
GROVE
J1
POWER
BUTTONB
BUTTONA
PAD1 3V3
PAD2 GPIO2
PAD3 GPIO38
PAD4 GPIO36
GPIO36_EXT
PAD5 GPIO0
GPIO0_EXT
PAD6 VIN
PAD7 5VOUT
PAD8 GND
PAD9 GPIO26
GPIO26_EXT
PAD10 GPIO25
GPIO25
EXT_VDD
VBUS_VIN
VESP_3V3
IPSOUT
RTC_INT
PWR_KEY
R401 10K
C401
106/6.3V